High Accuracy Fixed Range

PT40 SERIES

- Gauge, compound, absolute and vacuum ranges from 2 psig to 15,000 psig
- Premium accuracy
- Current and voltage outputs available
- 316 and 13-8PH Stainless Steel wetted parts
- Field adjustable offset and span
- CE compliant to suppress RFI, EMI and ESD
- RoHS compliant

APPLICATIONS

- Hydraulics & pneumatics
- Laboratory & test equipment
- Power generation
- Automation
- Mobile equipment
- General industrial

SPECIFICATIONS

Output signals	4 mA to 20 mA, 2-wire; 0 Vdc to 5 Vdc, 0 Vdc to 10 Vdc, 1 Vdc to 5 Vdc,3-wire	
Pressure ranges	Gauge, compound, absolute and vacuum ranges from 2 psi to 15,000 psi	
Accuracy*	±0.25% of span, optional ±0.125% of span, non-linearity best fit straight line per IEC 61298-2 at reference conditions	
Adjustment	± 10% full scale for zero and span	
Response time	Less than 1 ms (between 10% and 90% full scale)	
Service life	> 100 million load cycles	
Temperature ranges*	Compensated: Media: Ambient: Storage:	32 °F to 176 °F (0 °C to 80 °C) -22 °F to 212 °F (-30 °C to 100 °C) -22 °F to 185 °F (-30 °C to 85 °C) -40 °F to 212 °F (-40 °C to 100 °C)
Power requirement*	10 Vdc to 30 Vdc: 14 Vdc to 30 Vdc:	4 mA to 20 mA, 2-wire 1 Vdc to 5 Vdc, 3-wire, 0 Vdc to 5 Vdc, 3-wire 0 Vdc to 10 Vdc, 3-wire
Proof pressure	< 300 psi: 300 – 10,000 psi: > 10,000 psi:	3 times full scale 2 times full scale 1.5 times full scale
Burst pressure	< 300 psi: 300 – 10,000 psi: > 10,000 psi:	5 times full scale 4 times full scale 3 times full scale
Measuring element	316 Stainless Steel: 13-8PH Stainless Steel:	Vacuum through 300 psi ≥ 500 psi
Process connection	316 Stainless Steel Front flush: NBR seal standard (optional FKM or EPDM)	
Housing material	316 Stainless Steel	
Environmental rating	IP65: DIN EN 175301-803 Form C, DIN EN 175301-803 Form A IP67: 4-pin Bayonet, 6-pin Bayonet, 1/2" NPT conduit, M12 x 1 (4-pin), Integral cable	
Electromagnetic rating	CE compliant to EMC norm EN 61326:2014/A1:1998 RFI, EMI and ESD protection	
Electrical protection	Reverse polarity, overvoltage and short circuit protection	
Shock	1,000 g's according to IEC 60068-2-27	
Vibration	20 g's according to IEC 60068-2-6	
Weight	Approximately 7.5 oz.	

* See user manual for detailed specifications

WARNING: This product can expose you to chemicals including Lead and Nickel, which are known to the State of California to cause cancer and birth defects or other reproductive harm. For more information go to www.P65Warnings.ca.gov

NOSHOK,Inc. 1010 W. Bagley Road | Berea, OH 44017 | Ph 440.243.0888 | Fax 440.243.3472

ORDERING INFORMATION

SERIES	**PT40**											
PRESSURE RANGES	**15psiv**	-15 psig to 0 psig	**3psig**	0 psig to 3 psig	**200psig**	0 psig to 200 psig	**3000psig**	0 psig to 3,000 psig	**30psia**	0 psia to 30 psia		
	15psic	-15 psig to 15 psig	**5psig**	0 psig to 5 psig	**300psig**	0 psig to 300 psig	**4000psig**	0 psig to 4,000 psig	**60psia**	0 psia to 60 psia		
	30psic	-15 psig to 30 psig	**10psig**	0 psig to 10 psig	**500psig**	0 psig to 500 psig	**5000psig**	0 psig to 5,000 psig	**100psia**	0 psia to 100 psia		
	60psic	-15 psig to 60 psig	**15psig**	0 psig to 15 psig	**600psig**	0 psig to 600 psig	**6000psig**	0 psig to 6,000 psig	**150psia**	0 psia to 150 psia		
	100psic	-15 psig to 100 psig	**30psig**	0 psig to 30 psig	**750psig**	0 psig to 750 psig	**7500psig**	0 psig to 7,500 psig	**200psia**	0 psia to 200 psia		
	200psic	-15 psig to 200 psig	**60psig**	0 psig to 60 psig	**1000psig**	0 psig to 1,000 psig	**10000psig**	0 psig to 10,000 psig	**300psia**	0 psia to 300 psia		
	300psic	-15 psig to 300 psig	**100psig**	0 psig to 100 psig	**1500psig**	0 psig to 1,500 psig	**15000psig**	0 psig to 15,000 psig				
	2psig	0 psig to 2 psig	**150psig**	0 psig to 150 psig	**2000psig**	0 psig to 2,000 psig	**15psia**	0 psia to 15 psia				
	psiv = vacuum gauge pressure		psic = compound gauge pressure		psig = gauge pressure		psia = absolute pressure		Other ranges available on request			
	Note: Front flush connection is available for pressure ranges up to 0 psig to 8,000 psig											
ACCURACIES	**1**	±0.25% (of span, non-linearity, BFSL per IEC 61298-2 at reference conditions)			**2**	±0.125% (of span, non-linearity, BFSL per IEC 61298-2 at reference conditions)						
OUTPUT SIGNALS	**1**	4 mA to 20 mA, 2-wire			**3**	1 Vdc to 5 Vdc, 3-wire						
	2	0 Vdc to 5 Vdc, 3-wire			**5**	0 Vdc to 10 Vdc, 3-wire						
PROCESS CONNECTIONS	**1**	1/8" NPT male			**9**	SAE J1926-1:7/16-20 female			**13**	G 1 B Front flush (For ranges with span <30 psi)		
	2	1/4" NPT male			**10**	G1/4B EN837			**45**	7/16-20 SAE J514 FIG 34B (Non-Adjustable)		
	8	1/2" NPT male			**11**	G 1/2B Front flush (For ranges with span ≥ 30 psi)			**83**	G 1/2 B EN837		
	Other connections available upon request											
ELECTRICAL CONNECTIONS	**2**	4-pin Bayonet			**14**	DIN EN 175301-803 Form A w/ 1/2" NPT female conduit			**25**	M12 x 1 (4-pin)		
	3	6-pin Bayonet			**16**	1/2" NPT conduit w/ 3 ft. cable			**36**	3 ft. Integral cable		
	7	DIN EN 175301-803 Form C			**17**	DIN EN 175301-803 Form C w/ 3 ft. cable			**70**	DIN EN 175301-803 Form C w/o mating connector		
	8	DIN EN 175301-803 Form A			**18**	DIN EN 175301-803 Form A w/ 3 ft. cable			**80**	DIN EN 175301-803 Form A w/o mating connector		
OPTION	**ST8**	SS Threaded Orifice (0.8 mm)			**EP**	EPDM sealing*						
	VT	FKM sealing*										

*Available to Front flush process connections only, -11 and -13

Please consult your local NOSHOK Distributor or NOSHOK, Inc. for availability and delivery information.

EXAMPLE

PT40 – 15000psig – 1 – 1 – 8 – 7 – ST8

Series ..... PT40 Series
Pressure range ..... 0 psig to 15,000 psig
Accuracy ..... ±0.25% of span (BFSL)
Output signal ..... 4 mA to 20 mA, 2-wire
Process connection ..... 1/2 NPT male
Electrical connection ..... DIN EN 175301-803 Form C
Option ..... SS Threaded orifice

UNINSTALLED OPTIONS			
G1A-WELD-ON-ADAPTER	Weld on adapter for front flush only	**G1/2A-WELD-ON-ADAPTER**	Weld on adapter for front flush only

NOSHOK,Inc. 1010 W. Bagley Road | Berea, OH 44017 | Ph 440.243.0888 | Fax 440.243.3472

Dimensions

PT40-2 (4-Pin Bayonet)

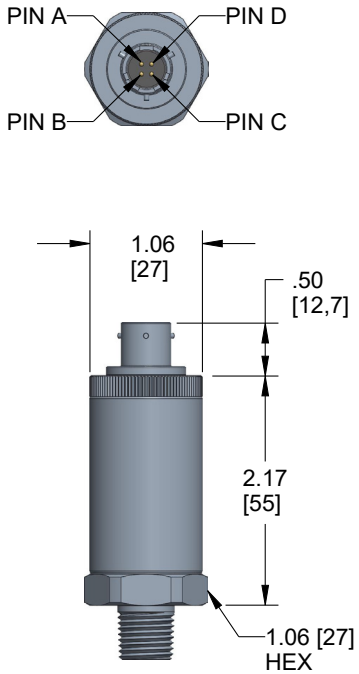

PT40-3 (6-Pin Bayonet)

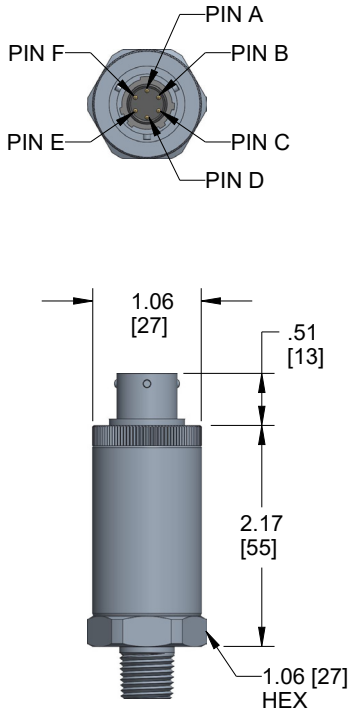

PT40 (DIN EN 175301-803 Form C)

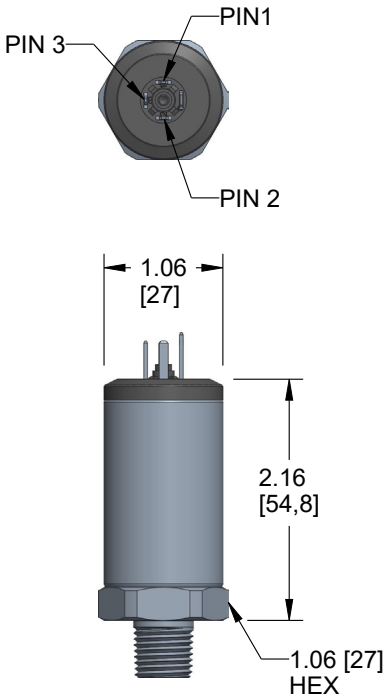

DIN Form C (PT40-70) w/o mating connection

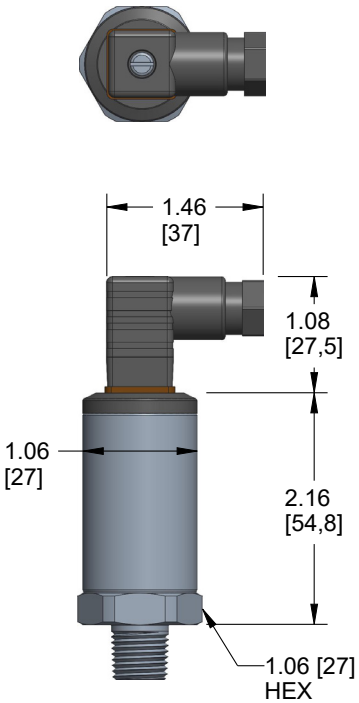

DIN Form C (PT40-7)

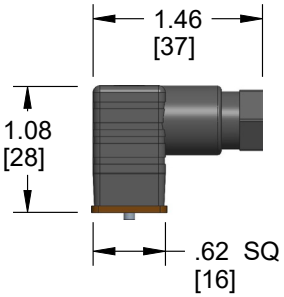

DIN Form C

PT40 (DIN EN 175301-803 Form A)

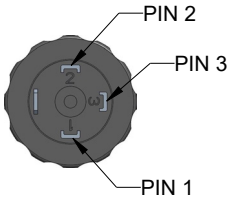

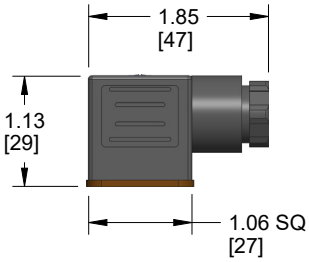

DIN Form A (PT40-8)

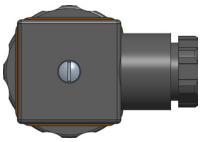

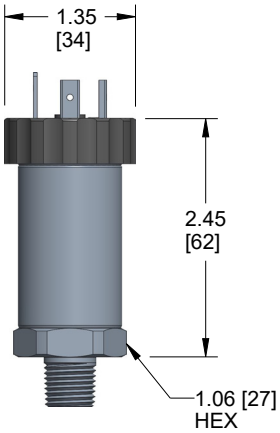

DIN Form A w/o mating connector (PT40-80)

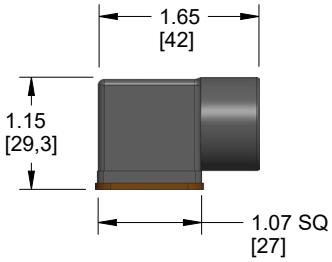

DIN FORM A w/ 1/2" NPT female conduit (PT40-14)

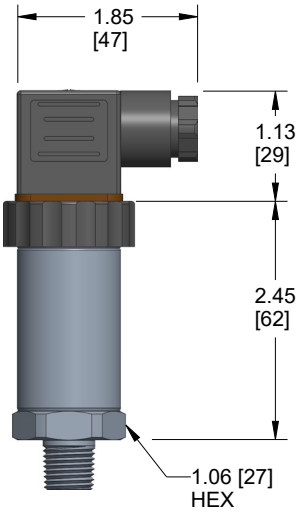

DIN Form A (PT40-8)

PT40-16 (1/2" NPT conduit w/ 3 ft. cable)

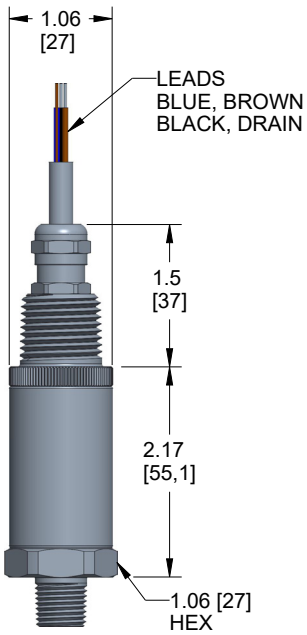

PT40-25 (M12 x 1 4-pin)

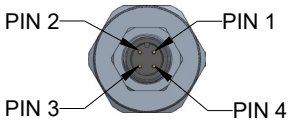

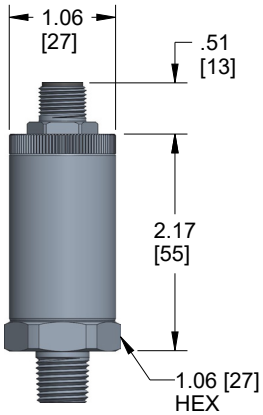

PT40-36 (3 ft. Integral Cable)

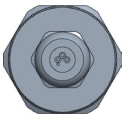

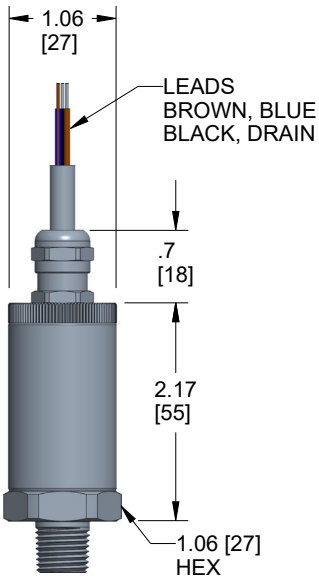

NOSHOK,Inc. 1010 W. Bagley Road | Berea, OH 44017 | Ph 440.243.0888 | Fax 440.243.3472

Dimensions

PT40 Process Connections

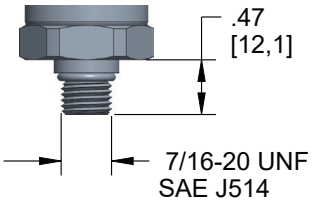

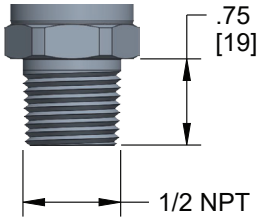

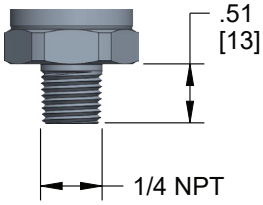

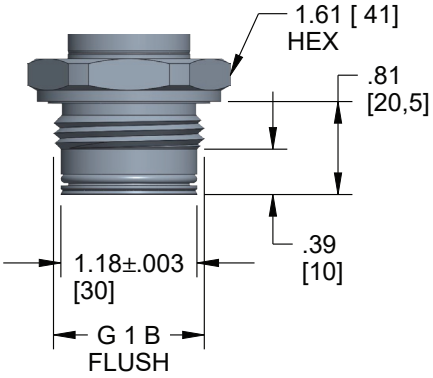

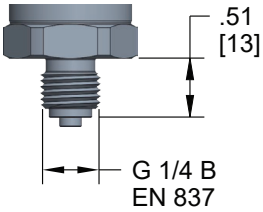

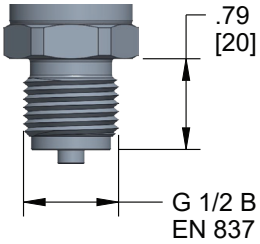

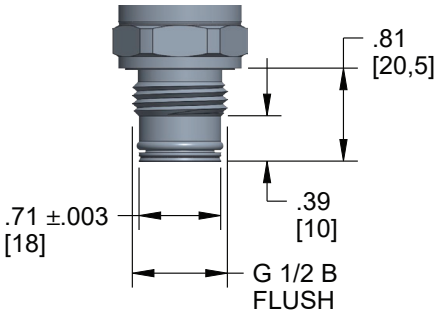

NOSHOK,Inc. 1010 W. Bagley Road | Berea, OH 44017 | Ph 440.243.0888 | Fax 440.243.3472